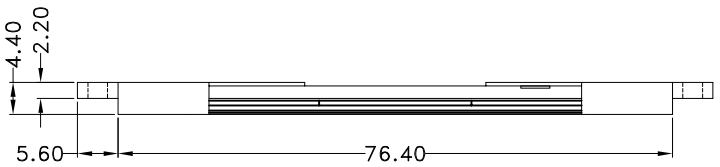

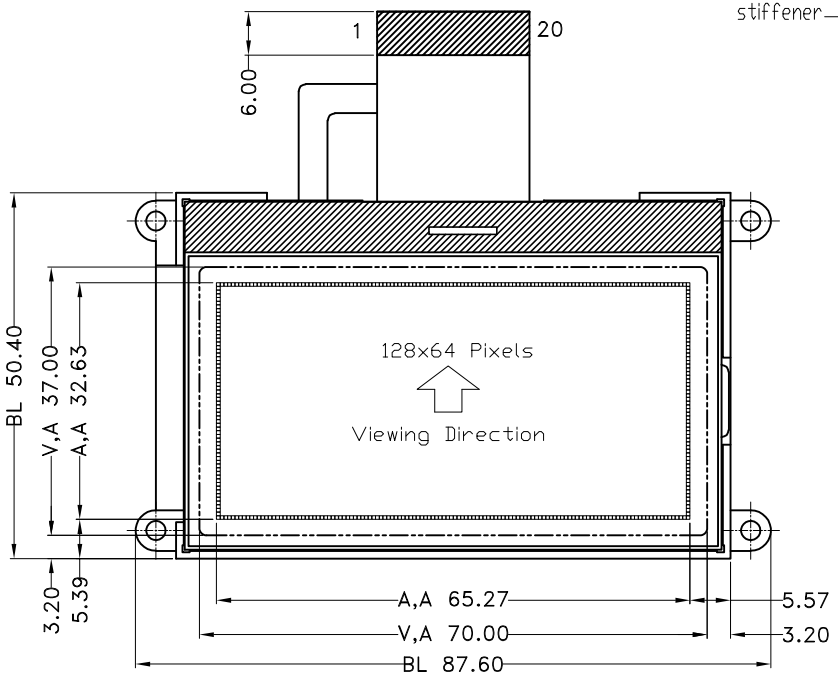

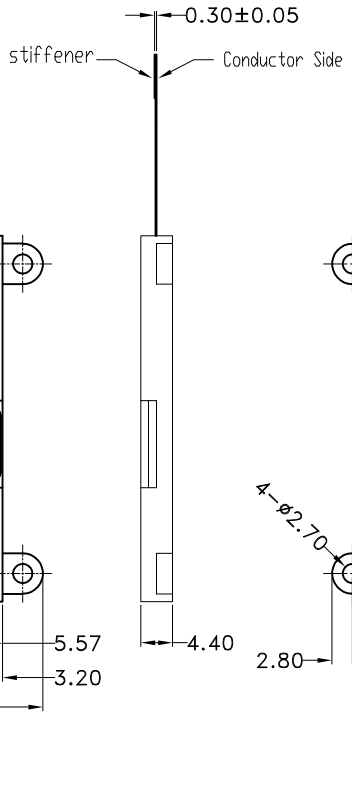

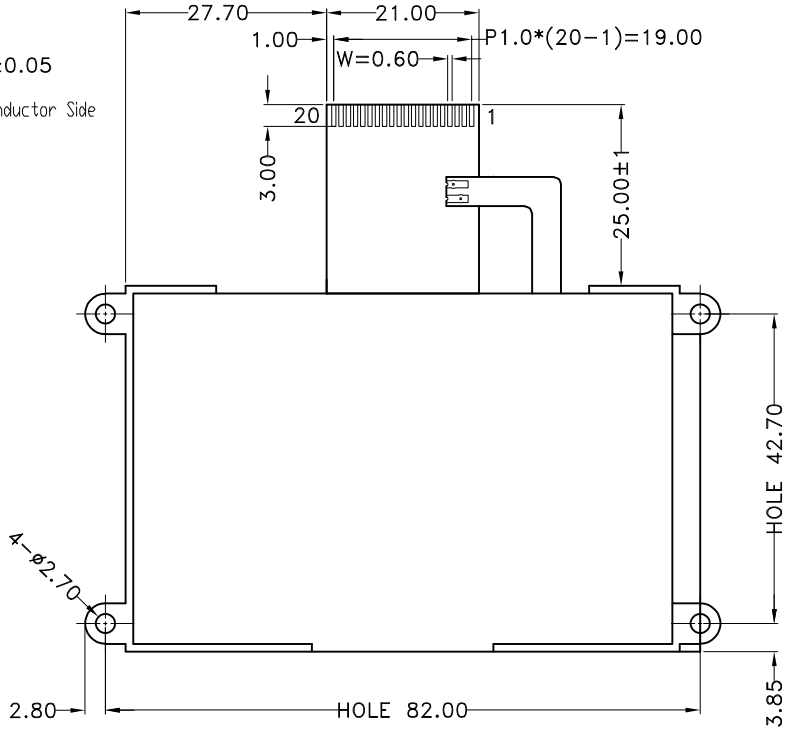

Terminal	
No.	Pin Name
1	BLK
2	BLA
3	/CS1
4	/RES
5	A0
6	SCLK
7	SDA
8	VDD
9	VSS
10	VOUT
11	C3+
12	C1-
13	C1+
14	C2+
15	C2-
16	V4
17	V3
18	V2
19	V1
20	V0

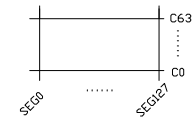

Panel Wiring Details
Scale=free

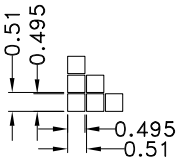

DOT DETAIL
SCALE 5:1

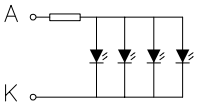

BL Circuit Diagram

*1. LCD Display Type	STN-Blue,Transmissive,Negative		
*2. Viewing Diretion	6H	*6. Storage Temp	-30°C~80°C
*3. LCD Driver Mode	1/64Duty,1/9Bias	*7. Driver IC	ST7565R
*4. Operating Voltage	3.3V	*8. Backlight	WHITE Vf=3.3v If=60mA
*5. Operating Temp	-20°C~70°C	*9. ROHS	

HOT DISPLAY

Dwg Title: HTG12864-127-25W-20C10-V01			
EDC No:		Ver: A/0	
Scale 1:1	Unit mm	Tol. ±0.3	
Drawn	Checked	Date: 2024-04-09	